VERTICAL ROD DEVICE

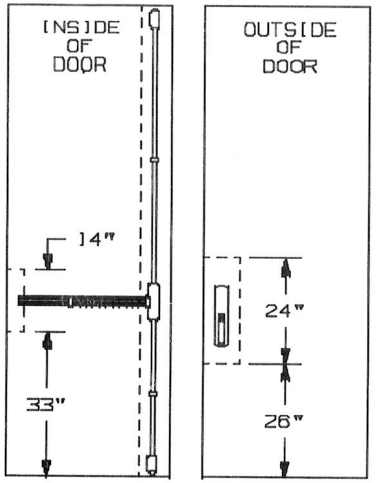

RIM OR MORTISE DEVICE

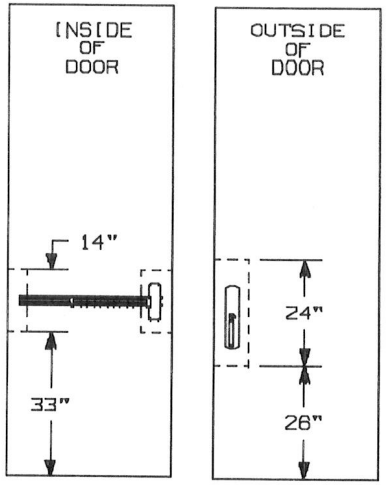

RECOMMENDED REINFORCING - HOLLOW METAL DOORS

PANIC DEVICES: 18 GAGE
FIRE EXIT HARDWARE DEVICES: 16 GAGE
STRIKES: 16 GAGE
ELECTROMAGNETIC LOCKS: 12 GAGE

IMPORTANT INFORMATION:

1. PAY PARTICULAR ATTENTION TO HARDWARE HANDING REQUIREMENTS BEFORE PREPARING THE DOOR.
2. REINFORCEMENTS ON HOLLOW METAL DOORS TO BE 5" WIDE OR FULL WIDTH OF STILE.
3. IF NO OUTSIDE TRIM IS USED, REINFORCEMENT OF THE OUTSIDE DOOR SKIN IS NOT REQUIRED UNLESS THE DEVICE IS THRU BOLTED.
4. FOR MOUNTING CONCEALED VERTICAL ROD LATCHES ON ALUMINUM DOORS THE RECOMMENDED REINFORCING IS 3/8" MINIMUM THICK ALUMINUM OR 16 GAGE MINIMUM THICK STEEL.
5. HINGE STILE PREPARATION IS TO BE DONE AT INSTALLATION.

CUSTOMER NAME: _____

JOB NAME: _____

CUSTOMER ORDER NUMBER: _____

DEVICE	TEMPLATE NUMBER	TRIM	TEMPLATE NUMBER	STRIKE	TEMPLATE NUMBER	MISCELLANEOUS	TEMPLATE NUMBER

NOTES:

MASTER REINFORCING SHEET

VON DUPRIN®

TEMPLATE NUMBER: 10001_3

DATE: 8-12-98