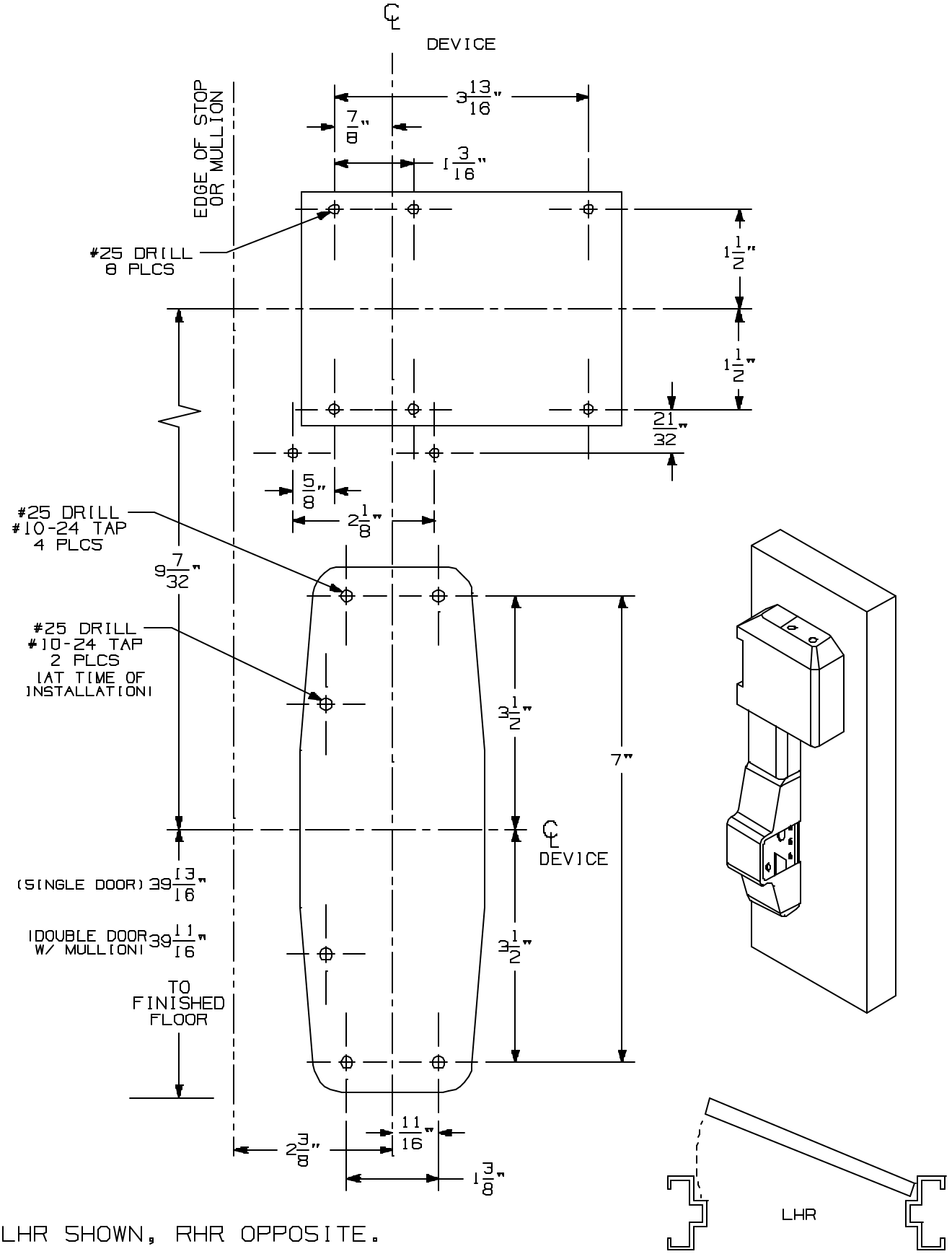

LHR SHOWN, RHR OPPOSITE.

98/99HSEO, 98/99HSEO-F, 98 /99ELHSEO & 98/99ELHSEO-F SERIES DEVICE METAL DOOR APPLICATION

VON DUPRIN. 5

NOTE: SEE MASTER SHEET NO. 10001 FOR SUGGESTED REINFORCING.

TEMPLATE NUMBER: 10365_5

DATE: 5-27-98